EP-07-44-2

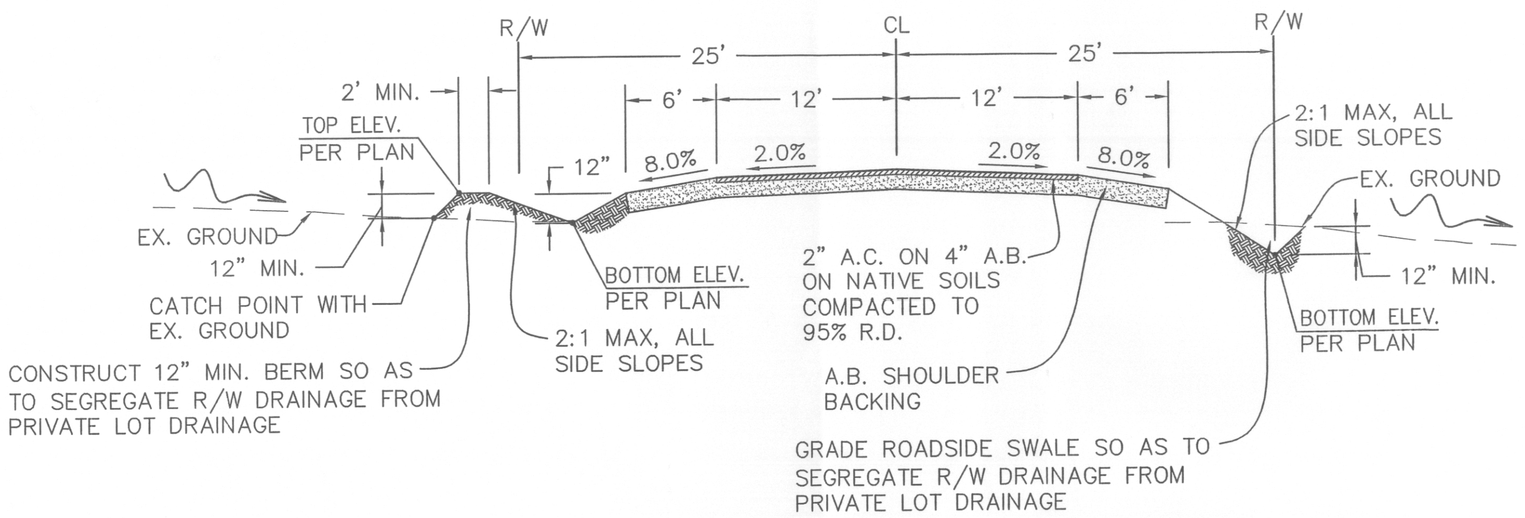

ROAD "A"
STA 1+40 TO 8+70
NO SCALE

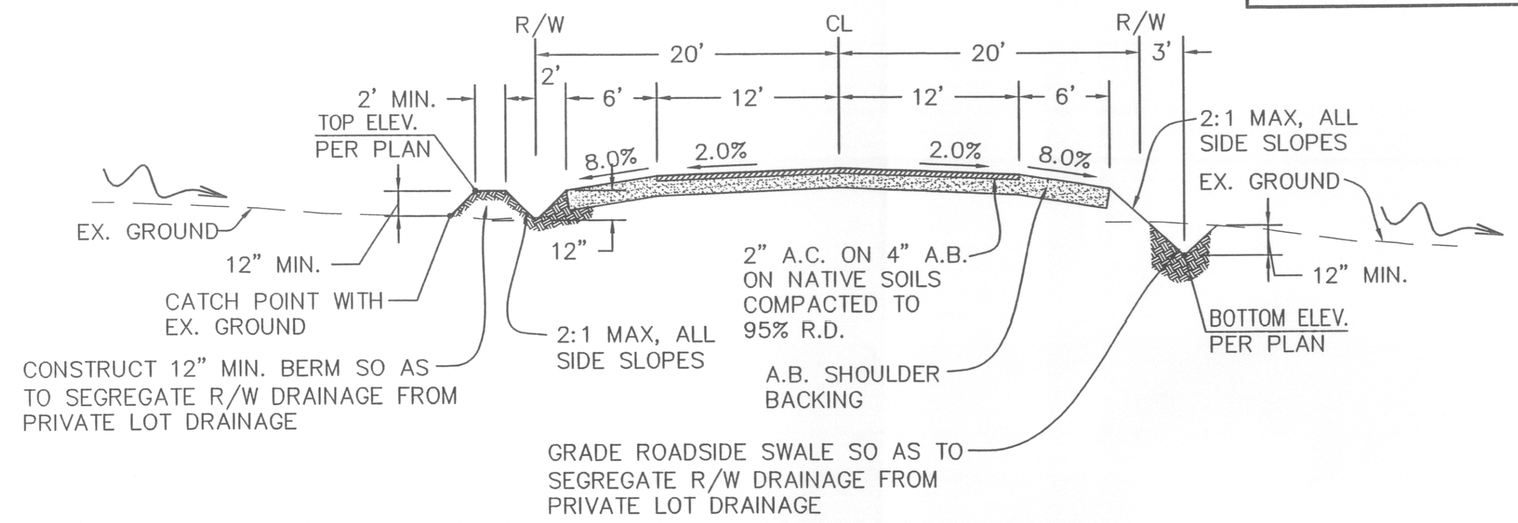

ROAD "B"
STA 2+30 TO 4+50
NO SCALE

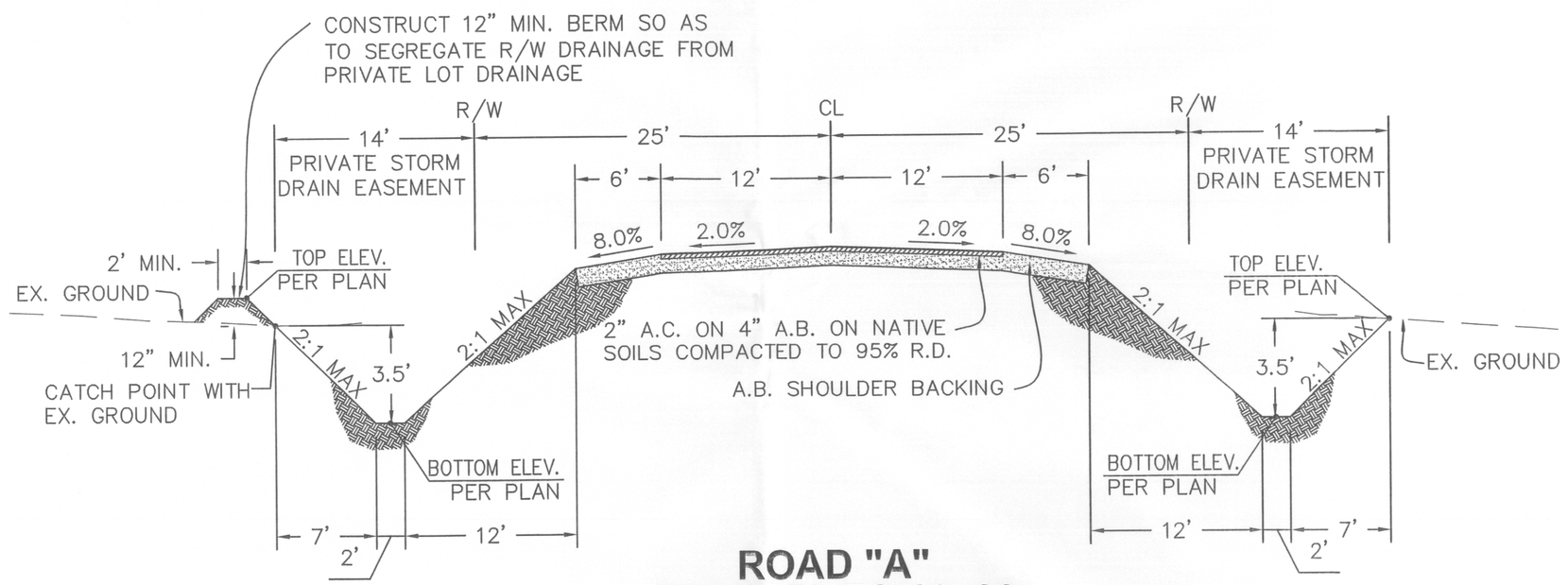

ROAD "A"
STA 8+70 TO 16+00
NO SCALE

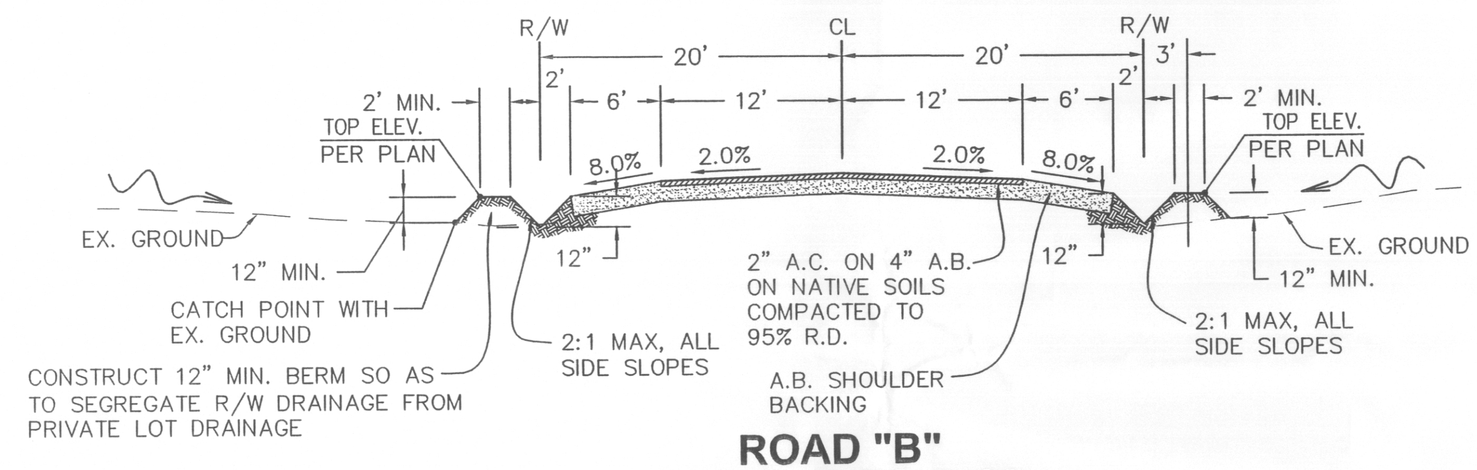

ROAD "B"
STA 4+50 TO 8+90
NO SCALE

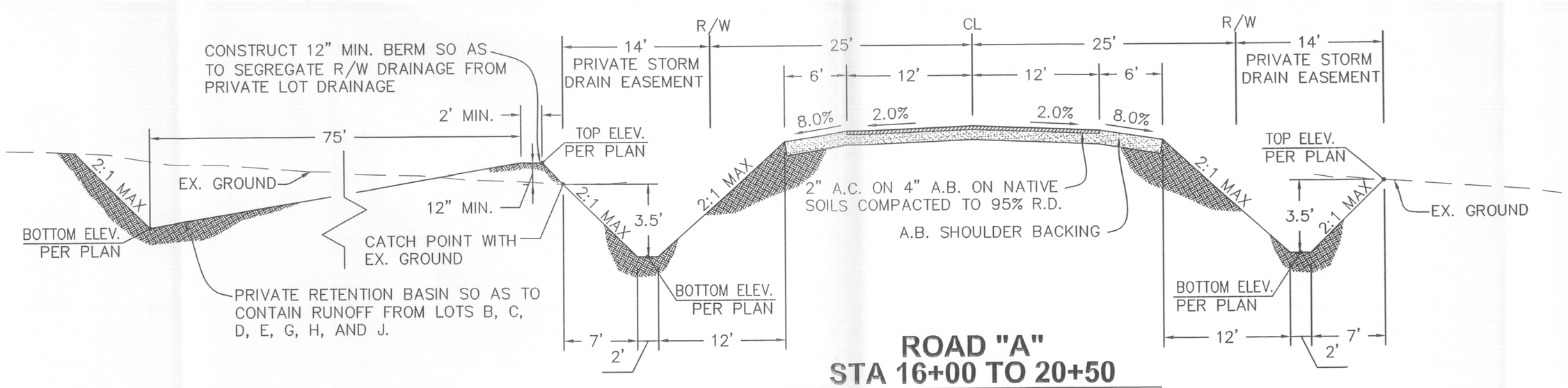

ROAD "A"
STA 16+00 TO 20+50
NO SCALE

DIGALERT
DIAL TOLL FREE
1-800-227-2600
AT LEAST TWO DAYS
BEFORE YOU DIG
UNDERGROUND SERVICE ALERT OF NORTHERN CALIFORNIA

SCALE	DRAWN BY	DESIGNED BY	CHECKED BY
AS NOTED	RFC	RFC	RFC

REVISIONS

DATE

GK Giuliani & Kull, Inc.
Engineers • Planners • Surveyors
440 S. Yosemite Avenue, Suite A, Oakdale, CA 95361
(209) 847-8726 Fax (209) 847-7323
Auburn • San Jose • Oakdale

PRIVATE ROADWAY PLANS
27744 E. CARTER ROAD
SAN JOAQUIN COUNTY, CALIFORNIA

TYPICAL CROSS-SECTIONS
AND DETAILS

REGISTERED PROFESSIONAL ENGINEER
ROBERT F. CHRISTENSEN
NO. C63087
EXP. 06-30-08
CIVIL
STATE OF CALIFORNIA

SHEET
C2
OF 9

JOB NO.
03133

P:\2003\03133 B\dwg\03133BKEY.dwg 1/19/2007 10:52:22 AM PST